FAMAG®

Product of the year

2022

FAMAG® TCT router bits

4-piece set chamfer bits 3118/flush trim bits 3101

each one pc

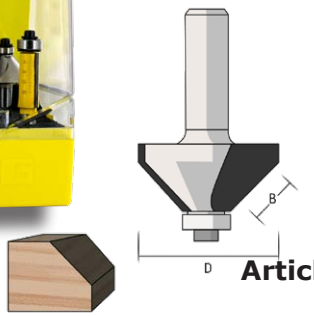

TCT flush trim bit 3101
» D12,7 B12,7 TL60
» D12,7 B25,4 TL70

TCT chamfer bit 3118
» D36 B12,7 <45°
» D31,8 B12,7 <45°

all router bits with ball bearing and shank 8 mm

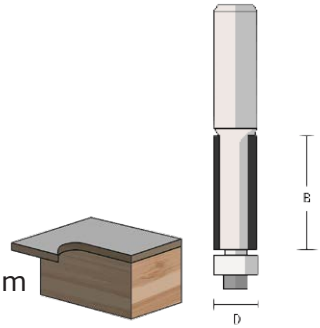

Article No. 3101.940 ***€ 85,15 plus VAT**

7-piece set straight bits 3107

each one pc TCT straight bit 3107

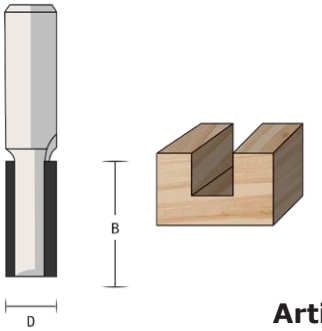

»	D4	B11	TL51
»	D6	B19	TL51
»	D8	B20	TL51
»	D10	B20	TL51
»	D12	B20	TL51
»	D16	B20	TL51
»	D20	B20	TL51

all router bits with shank 8 mm, without ball bearing

Article No. 3107.907 ***€ 110,70 plus VAT**

4-piece set chamfer bits 3118

each one pc chamfer bit 3118

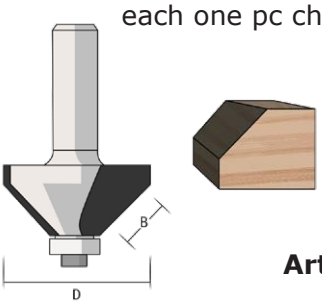

»	D28,6	B9	<45°
»	D36	B12,7	<45°
»	D44,5	B15,9	<45°
»	D31,8	B12,7	<45°

all router bits with ball bearing and shank 8 mm

Article No. 3118.904 ***€ 114,95 plus VAT**

6-pcs combi set

each 1 pc

»	TCT dovetail bit	D12,7	B12,7	<14°	w.out ball bearing
»	TCT cove bit	D12,7	B9,5	R6,4	w.out ball bearing
»	TCT straight bit	D8	B20		w.out ball bearing
»	TCT straight bit	D12	B20		w.out ball bearing
»	TCT rounding over bit	D20,7	B9,5	R4	with ball bearing
»	TCT profile bit	D34,9	B20	R6,4	with ball bearing

all router bits with shank 8 mm

Article No. 3113.906 ***€ 119,25 plus VAT**

For further information please contact your local dealer!

Technical changes or errors reserved!

*Recommended retail price for offer period.

FAMAG-Werkzeugfabrik GmbH & Co. KG | Rather Straße 29 | D-42855 Remscheid | Germany | Phone +49 (2191) 9284-0 | Fax +49 (2191) 9284-20 | Email info@famag.com | Web www.famag.com

FAMAG®

Product of the year

2022

FAMAG® TCT router bits

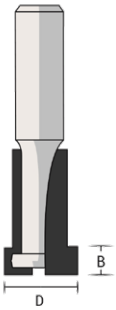

3-piece set T-slot cutters 3154 for M5/M6/M8

each one pc TCT T-Slot-cutter 3154

- » M5 D 8,5/5,6 B7/4,5
- » M6 D10,5/6,6 B7/5,5
- » M8 D13,5/8,6 B7/7

all router bits with shank 8 mm, without ball bearing

Article No. 3154.903 ***€ 68,10 plus VAT**

4-piece set T-slot cutters 3154 for M6/M8/M10/M12

each one pc TCT T-slot cutter 3154

- » M6 D10,5/6,6 B7/5,5
- » M8 D13,5/8,6 B7/7
- » M10 D17,5/10,6 B7/8,5
- » M12 D19,5/12,6 B7/9,5

all router bits with shank 8 mm, without b.b

Article No. 3154.904 ***€ 102,20 plus VAT**

5-piece set T-slot cutters 3154 for M5/M6/M8/M10/M12

each one pc TCT T-slot sutter 3154

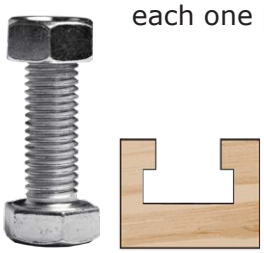

- » M5 D 8,5/5,6 B7/4,5
- » M6 D10,5/ 6,6 B7/5,5
- » M8 D13,5/ 8,6 B7/7
- » M10 D17,5/10,6 B7/8,5
- » M12 D19,5/12,6 B7/9,5

all router bits with shank 8 mm, without b.b.

Article No. 3154.905 ***€ 110,70 plus VAT**

8-pcs set rounding over bits 3109 - chamfer bits 3118

each 1 pc

»	TCT rounding over bit	D18,7	B9,5	R3
»	TCT rounding over bit	D20,7	B9,5	R4
»	TCT rounding over bit	D25,4	B12,7	R6,4
»	TCT rounding over bit	D28,6	B12,7	R8
»	TCT chamfer bit	D36	B12,7	<45°
»	TCT chamfer bit	D44,5	B15,9	<45°
»	TCT chamfer bit	D31,8	B12,7	<45°
»	TCT chamfer bit	D28,6	B9,0	<45°

all router bits with ball bearing and shank 8 mm

Article No. 3118.908 ***€ 221,45 plus VAT**

For further information please contact your local dealer!

Technical changes or errors reserved!

*Recommended retail price for offer period.

FAMAG-Werkzeugfabrik GmbH & Co. KG | Rather Straße 29 | D-42855 Remscheid | Germany | Phone +49 (2191) 9284-0 | Fax +49 (2191) 9284-20 | Email info@famag.com | Web www.famag.com

FAMAG®

Product of the year

2022

FAMAG® TCT router bits

4-pcs set flush trim bits 3101

jeach 1 pc TCT flush trim bit 3101

»	D6	B19	TL64
»	D12,7	B12,7	TL60
»	D12,7	B25,4	TL70
»	D12,7	B38	TL80

all router bits with ball bearing and shank 8 mm

Article No. 3101.904 ***€ 76,65 plus VAT**

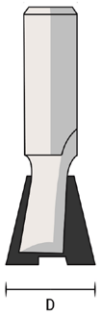

3-pcs set dovetail bits 3104

each 1 pc TCT dovetail bit 3104

»	D12,7	B12,7	<14°	TL44
»	D14,3	B12,7	<14°	TL45
»	D22	B22	<14°	TL54

all router bits with ball bearing and shank 8 mm

Article No. 3104.903 ***€ 59,60 plus VAT**

8-pcs set rounding over bit 3109 - flush trim bit 3101

each 1 pc

TCT rounding over bit 3109

»	D18,7	B9,5	R3
»	D20,7	B9,5	R4
»	D25,4	B12,7	R6,4
»	D28,6	B12,7	R8
»	D31,8	B15,9	R9,5

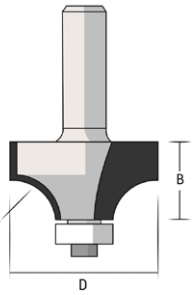

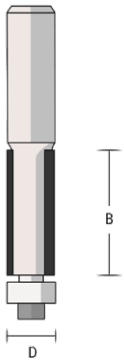

TCT flush trim bit 3101

»	D6	B19	TL64
»	D12,7	B12,7	TL60
»	D12,7	B25,4	TL70

all router bits with ball bearing and shank 8 mm

Article No. 3109.908 ***€ 178,85 plus VAT**

8-pcs combi set

each 1 pc

»	TCT flush trim bit	D12,7	B12,7	TL60	with ball bearing
»	TCT flush trim bit	D12,7	B25,4	TL70	with ball bearing
»	TCT straight bit	D4	B11		w.out ball bearing
»	TCT straight bit	D6	B19		w.out ball bearing
»	TCT straight bit	D8	B20		w.out ball bearing
»	TCT straight bit	D20	B20		w.out ball bearing
»	TCT rounding over bit	D24,5	B12,7	R6,4	with ball bearing
»	TCT chamfer bit	D12,7	B12,7	<45°	with ball bearing

all router bits with shank 8 mm

Article No. 3113.908 ***€ 144,80 plus VAT**

Technical changes or errors reserved!

For further information please contact your local dealer!

*Recommended retail price for offer period.

FAMAG-Werkzeugfabrik GmbH & Co. KG | Rather Straße 29 | D-42855 Remscheid | Germany | Phone +49 (2191) 9284-0 | Fax +49 (2191) 9284-20 | Email info@famag.com | Web www.famag.com

FAMAG®

Product of the year 2022

FAMAG® TCT router bits

TCT router bit set ‚Classic line' 12-pcs.

12-pcs. TCT router bit set, shank-Ø 8 mm, in metal box

» 1 pc. flush trim bit, with ball bearing (Ø 12,7 mm, CL 25,4 mm)»
» 1 pc. dovetail bit (Ø 14,3 mm, CL 12,7 mm)
» 1 pc. V-groove bit (Ø 12,7 mm, 90°)
» 1 pc. cove bit (Ø 12 mm, R6 mm)
» 1 pc. cove bit with ball bearing (Ø 21,5 mm, R6 mm)
» 3 pcs. straight bit (Ø 8, 12, 16 mm, CL 20 mm)
» 2 pcs. rounding over bit (R6 mm + R9,5 mm)
» 1 pc. chamfer bit (Ø 28,6 mm, 45°)
» 1 pc. profile bit (Ø 27 mm, R4 mm)

Article No. 3381.812 **€ 79,95 plus VAT**

TCT router bit set ‚Classic line' 6+6 pcs.

6+6-pcs. TCT router bit set shank-Ø 8 mm, in metal box

» 6 pcs. straight bit
(Ø 8 x 30 x 90 mm)
(Ø 10 x 30 x 90 mm)
(Ø 12 x 30 x 90 mm)
(Ø 16 x 30 x 90 mm)
(Ø 18 x 30 x 90 mm)
(Ø 20 x 30 x 90 mm)

» 6 pcs. rounding over bit
(R2 mm)
(R3 mm)
(R4 mm)
(R6 mm)
(R8 mm)
(R10 mm)

Article No. 3381.866 **€ 84,75 plus VAT**

TCT router bit set ‚Profi line' 12-pcs.

12-pcs. TCT router bit set, shank-Ø 8 mm, in plastic box

» 1 pc. flush trim bit, with ball bearing (Ø 12,7 mm, CL 25,4 mm)
» 1 pc. dovetail bit (Ø 14,3 mm, CL 12,7 mm)
» 1 pc. V-groove bit (Ø 12,7 mm, 90°)
» 1 pc. cove bit (Ø 12 mm, R6 mm)
» 1 pc. cove bit with ball bearing (Ø 21,5 mm, R6 mm)
» 3 pcs. straight bit (Ø 8, 12, 16 mm, CL 20 mm)
» 2 pcs. rounding over bit (R6 mm + R9,5 mm)
» 1 pc. chamfer bit (Ø 28 mm, 45°)
» 1 pc. profile bit (Ø 27 mm, R4 mm)

Article No. 3382.812 **€ 110,70 plus VAT**

TCT router bit set ‚Profi line' 22-pcs.

22-pcs. TCT router bit set, shank-Ø 8 mm, in plastic box

» 1 pc. flush trim bit, with ball bearing (Ø 12,7 mm, CL 25,4 mm)
» 1 pc. dovetail bit (Ø 14,3 mm, CL 12,7 mm)
» 1 pc. lettering bit (Ø 12,7 mm, 60°)
» 1 pc. V-groove bit (Ø 12,7 mm, 90°)
» 2 pcs. cove bit (Ø 8 mm, R4 mm + Ø 12 mm, R6 mm)
» 2 pcs. cove bit with ball bearing (Ø 19,5 mm, R5 mm + Ø 25,5 mm, R8 mm)
» 6 pcs. straight bit (Ø 6, 8, 10, 12, 16, 20 mm, CL 20 mm)
» 2 pcs. rounding over bit (Ø 22,7 mm, R5 mm + Ø 28,7 mm, R8 mm)
» 1 pc. chamfer bit (Ø 28 mm, 45°)
» 1 pc. bevel trim bit (Ø 19,9 mm, 22°)
» 1 pc. rabbeting bit (Ø 31,8 mm, CL 12,7 mm)
» 1 pc. torus bit (Ø 22,2 mm, R3,18 mm)
» 1 pc. profile bit (Ø 21 mm, R5 mm)
» 1 pc. profile bit with ball bearing (Ø 27 mm, R4 mm)
» 2 pcs. replacement ball bearings

Article No. 3382.822 **€ 187,40 plus VAT**

For further information please contact your local dealer!

Technical changes or errors reserved!

*Recommended retail price for offer period.

FAMAG-Werkzeugfabrik GmbH & Co. KG | Rather Straße 29 | D-42855 Remscheid | Germany | Phone +49 (2191) 9284-0 | Fax +49 (2191) 9284-20 | Email info@famag.com | Web www.famag.com